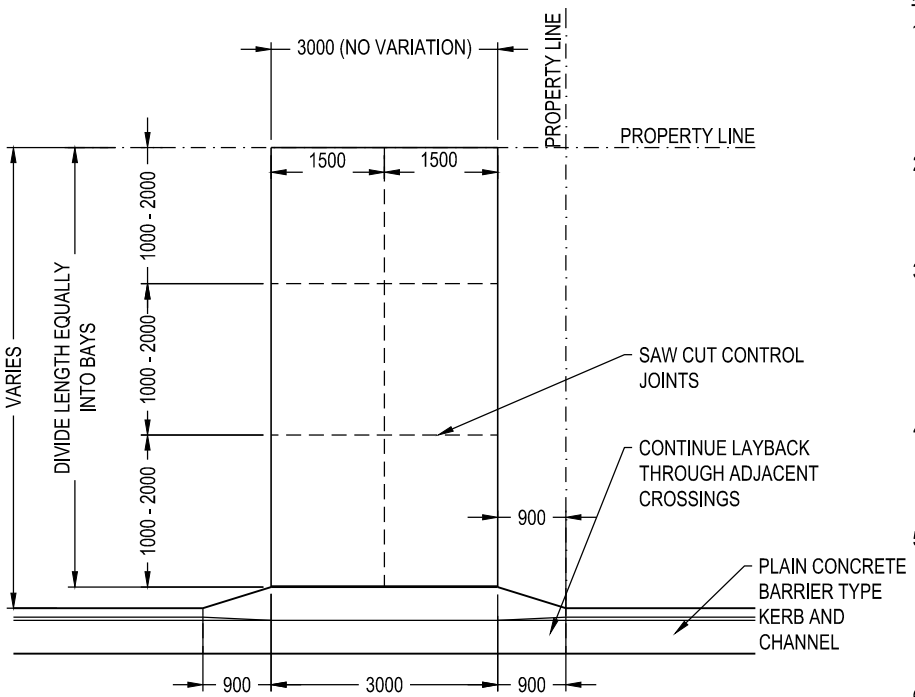

PLAN

SCALE 1:10

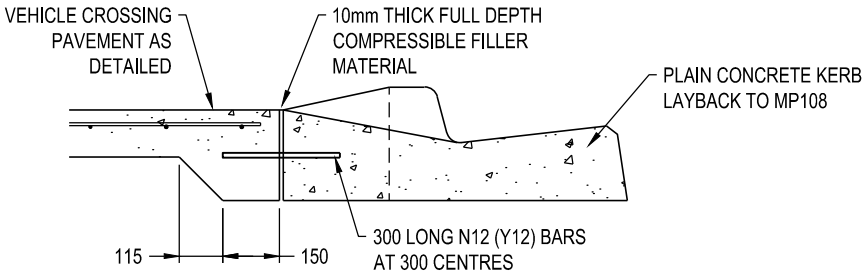

KERB SECTION - NEW KERB

SCALE 1:20

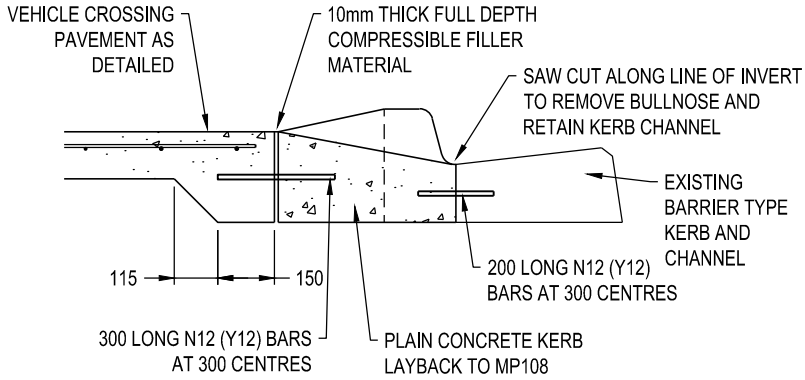

KERB SECTION - EXISTING KERB

SCALE 1:20

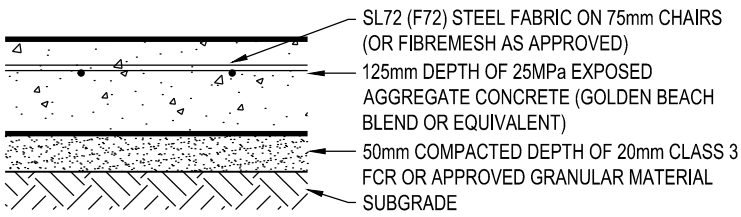

VEHICLE CROSSING PAVEMENT DETAIL

SCALE 1:10

NOTES:

1. THIS STANDARD SHOULD BE USED AS A GUIDE FOR THE INSTALLATION CONCRETE VEHICLE CROSSINGS WITHIN RANELAGH ESTATE, MT ELIZA. DEVIATION FROM THIS STANDARD MAY REQUIRE CONSENT FROM HERITAGE VICTORIA.
2. THIS STANDARD SHOULD BE READ IN CONJUNCTION WITH THE MORNINGTON PENINSULA SHIRE SPECIFICATION FOR THE CONSTRUCTION OF ROADS AND DRAINS.
3. PRIOR TO COMMENCING WORKS, CONSENT IS REQUIRED FROM THE MORNINGTON PENINSULA SHIRE TO UNDERTAKE WORKS WITHIN A ROAD RESERVE. PERMITS CAN BE OBTAINED BY CONTACTING THE CONSTRUCTION AND ASSET PROTECTION TEAM ON 03 5950 1040.
4. VEHICLE CROSSINGS SHOULD BE GRADED TO DISCOURAGE ACCEPTANCE OF STREET STORMWATER. FOR TYPICAL VEHICLE CROSSING PROFILE, REFER STANDARD DRAWING MP306.
5. EXPOSED AGGREGATE CONCRETE SHALL BE GOLDEN BEACH BLEND (OR APPROVED BROWN GRANITIC AGGREGATE EQUIVALENT). A RETARDING AGENT SHALL BE USED. EXPOSED AGGREGATE SHALL BE ACID WASHED WITHIN SEVEN (7) DAYS OF CONCRETE POUR.
6. ALL MEASUREMENTS ARE IN MILLIMETRES.

MORNINGTON PENINSULA Shire

STANDARD PLAN

TYPICAL VEHICLE CROSSING FOR PROPERTIES WITHIN RANELAGH ESTATE, MT ELIZA

MANAGER - INFRASTRUCTURE PROJECTS

DATE OF ISSUE	05/12/2024
SHEET NO	1 OF 1

MP310